Sl. No.	Problems	Ans
1	For the electrical network shown in Fig, determine the loop currents and all branch currents. 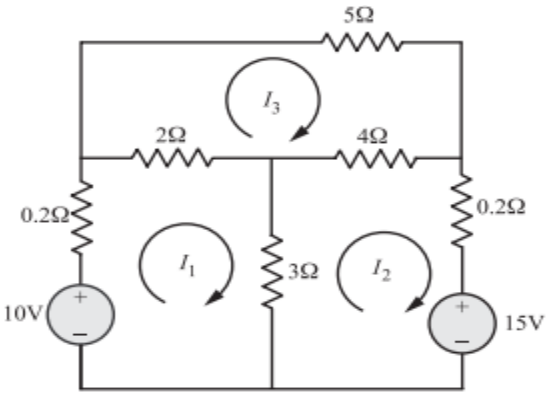	$I_1 = 0.11\mathbf{A}$ $I_2 = -2.53\mathbf{A}$ $I_3 = -0.9\mathbf{A}$
2	For the network shown in Fig. find the mesh currents. 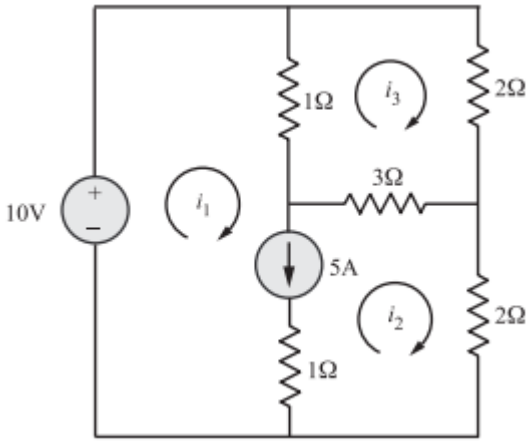	$i_1 = 7.5\mathbf{A}$, $i_2 = 2.5\mathbf{A}$ $i_3 = 2.5\mathbf{A}$
3	Use the node-voltage method to find the power developed by the 20 V source in the circuit shown in Fig.	**602.5 W**

	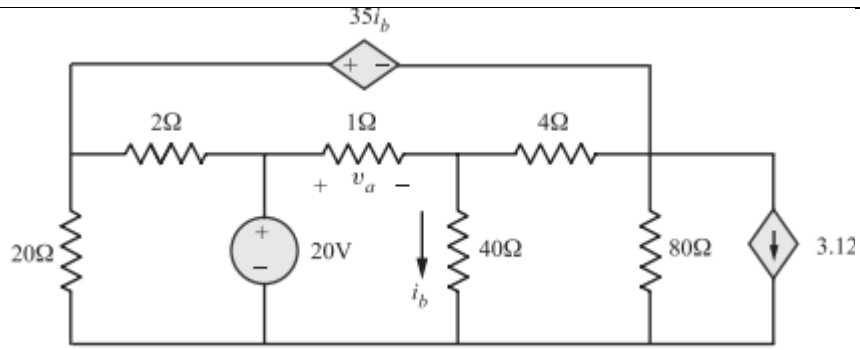	
4	Refer the network shown in Fig.. Find the node voltages Vd and Vc. 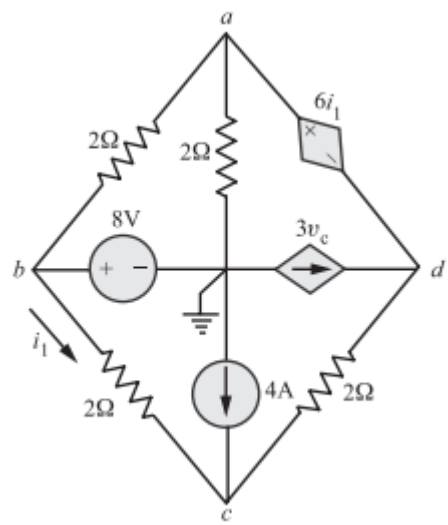	$v_c = -1.14\mathrm{V}$ $v_d = -18.3\mathrm{V}$
5	Use nodal analysis to find Vo in the circuit shown in Fig. 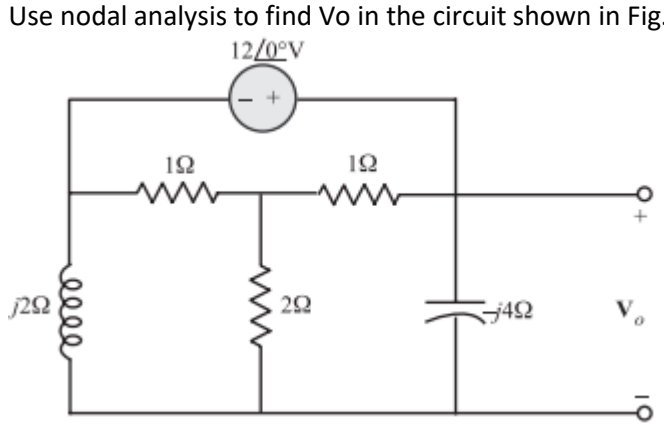	$\mathbf{V}_o = 11.056 - j8.09$
6	Find i1 in the circuit of Fig. using nodal analysis. 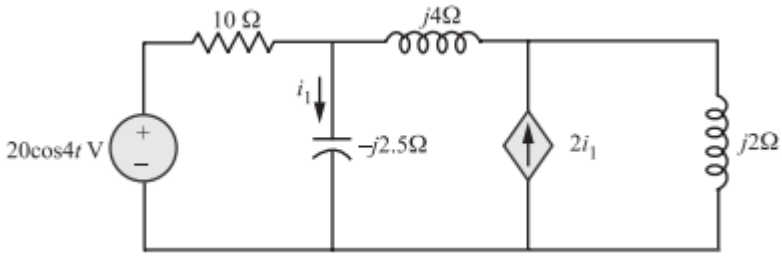	$i_1 = 7.59\cos(4t + 108.4°)$A
7	Determine the current Iin the circuit of Fig. using mesh analysis	$6.12\,\underline{/144.78°}$ A

	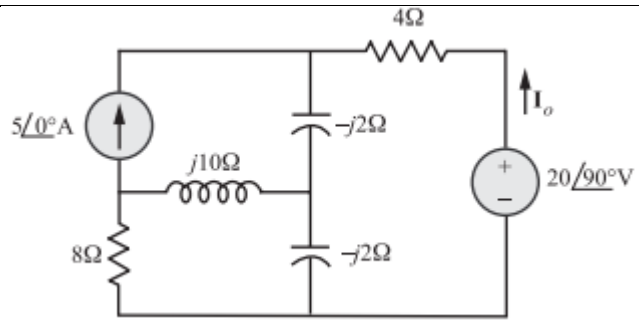	
8	The current io = 4A. Find the power dissipated in the 70 Ω resistor 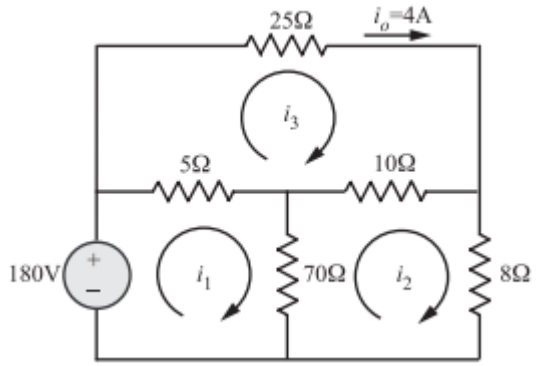	280 W
9	Refer the circuit shown in Fig.. Find I using mesh analysis. 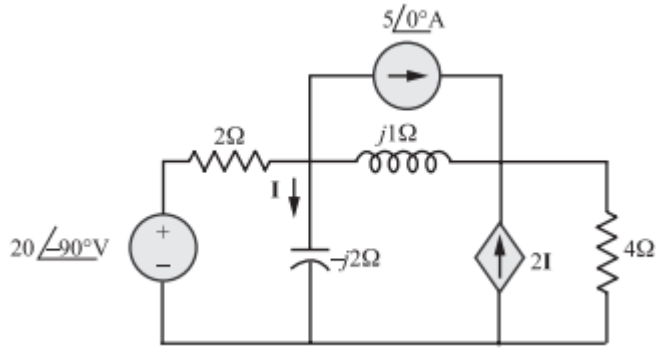	7.9 /43.49 A
10	Obtain the node voltages v1, v2 and v3 for the following circuit 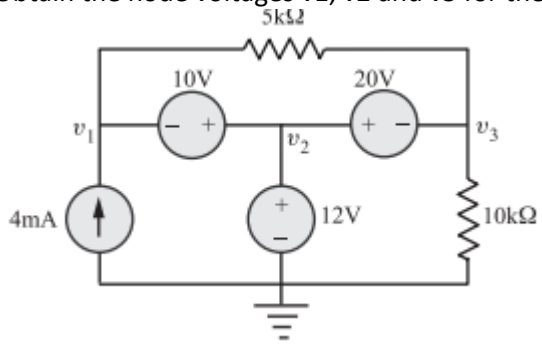	v1 = 2 V, v2 = 12 V, v3 =-8v

For the electrical network shown in Fig,determine the loop currents and all branch currents.